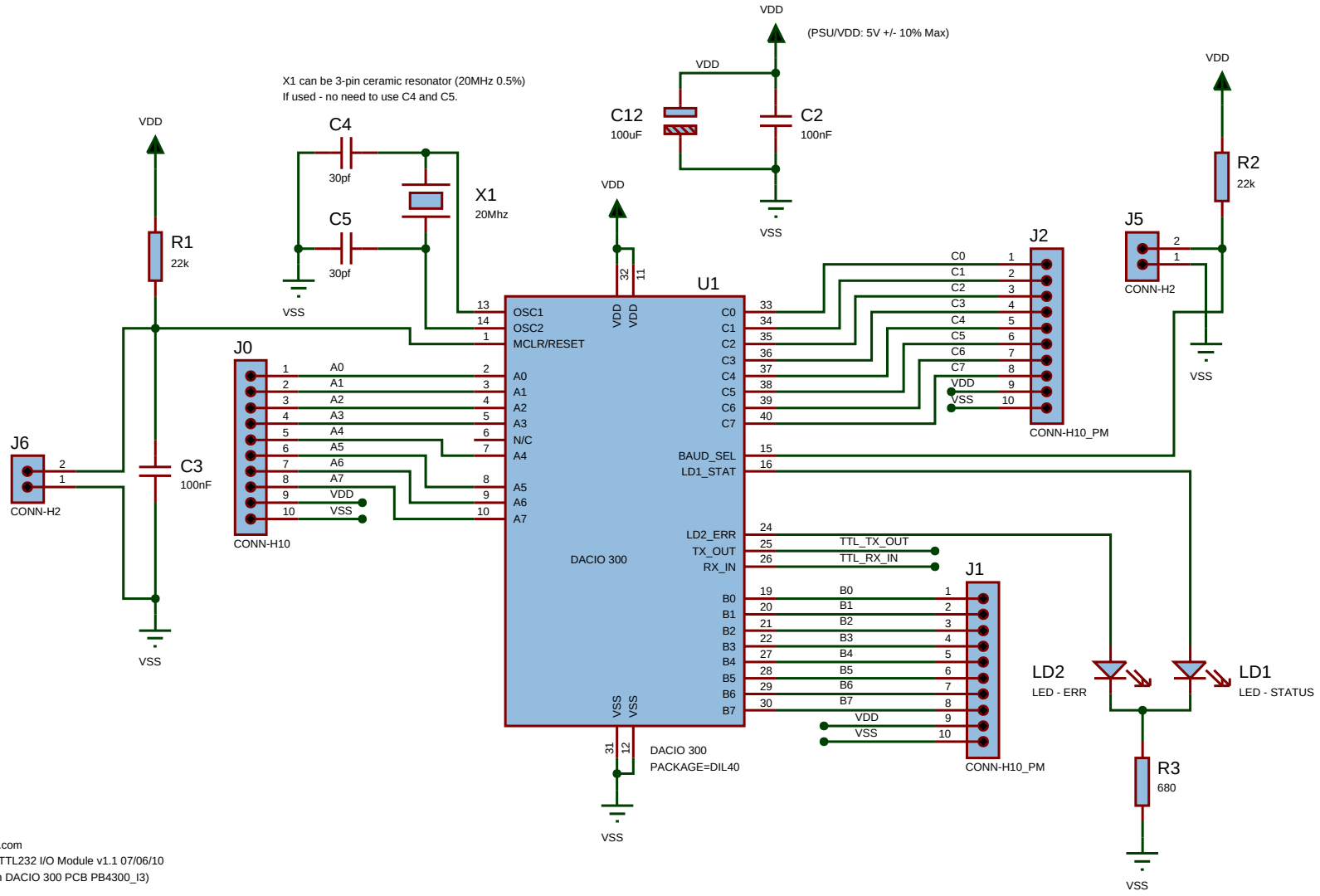

www.tronisoft.com
DACIO 300 - TTL232 I/O Module v1.1 07/06/10
(Adapted from DACIO 300 PCB PB4300_I3)